Grounding Instructions

This appliance must be grounded. If it should mal-Function or break down, grounding provides a path of least resistance for electric current to reduce the risk of electric shock. This appliance is equipped with a cord having an equipment-grounding conductor and grounding plug. The plug must be inserted into an appropriate outlet that is properly installed and grounded in accordance with all local codes and ordinances.

WARNING:Improper connection of the equipment grounding conductor can result in the risk of electric shock. Check with a qualified electrician or service person if you are in doubt as to whether the outlet is properly grounded. Do not modify the plug provided with the appliance-if it will not fit the outlet, have a proper outlet installed by a qualified electrician.

Technical specification:

Voltage:220-240VAC50/60HZ cable:3X1X12m
Power:1060W weight:28kg
Current:4.3A
Water sucring motor:220-240VAC1000W
Brush motor:24VDC60W
Clean water tanr capacity:6.5L
Dirty water tanr capacity:4.5L

This appliance is for use on a nominal 220 volt circuit, and has a grounded plug that looks like the plug illustrated in Figure A. A temporary adapter that looks like the adapter illustrated in figures B and C may be used to connect this plug to a 2-pole receptacle as shown in Figure B if a properly grounded outlet is not available. The temporary adapter should be used only until a properly grounded outlet(Figure A) can be installed by a qualified electrician.Whenever the adarter is used, is must be held in place by a metal screw.

Introduction

IMPORTANT!

This Cleaning System is a precision piece of equipment. However, it will do the best job for you only if you understand it. Please read this book all the way through before you try to use your new system. Read it again, and work through each step to make sure you understand it. Keep this book in a safe place for future reference.

How it Works

This Cleaning System will help you simply and easily clean bothfurniture and carpet. It uses standard electricalcurrent, so all you have to do is plug the power cordinto a properly grounded wall outlet.

This Cleaning System is a high quality tool that meets professional upholstery cleaning standards. It will give you years of dependable service even under the most demanding conditions. It's easy to use and maintain, and you'll like its flexibility. Engineered by one of the world's leading producers of heavy-duty cleaning equipment, you'll also like its many handy features.

WARNING:DISCONNECT FROM POWER BEFORE SERVICING

Caution:Do not overwet fabrics

How the cleaning process works

(A) Container for special liquid detergent.
(B) Exhaust air from electric motor travels to
(C),where it mixes with detergent to produce Dry foam.
(D) Dirt-dissolving foam rushes to(E)brush head.
(E) Gentle outside brushes revolve clockwise while inside brushes revolve counterclockwise. This double action separates greasy dirt from fabric and givesdeep ,thorough shampooing.
(F) Nozzle of powerful vacuum removes dirt-laden foam from fabric.
(G) Foam with dirt held in suspension arrives in dirt Receptacle tank.
(H) Air passes through filter and (B) motor to air outlet at bottom of machine to complete the cleaningcycle.

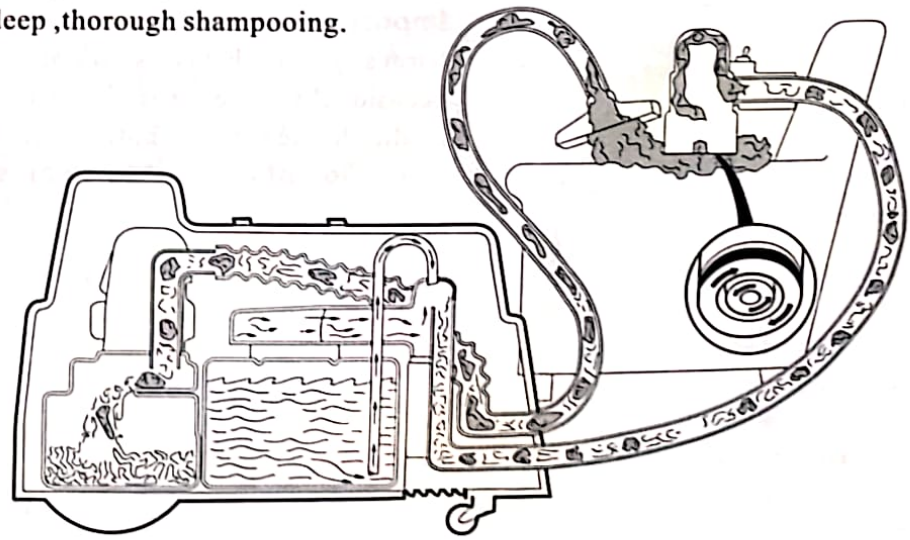

Maintenance Procedures

IMPORTANT

Please Read Very Carefully

CAUTION: Always disconnect the machine from electrical supply when working on it.

This section has been prepared by the Von Schrader Company Repair Department. It is made available for use by others with no liability accepted for user safety or damage to equipment resulting from its use.

For additional information regarding troubleshooting and repair of this equipment,please contact the Von Schrader Company.

Refer to the Part List(s)/Wiring Diagrams at the end of this manual for assistance during troubleshooting and maintenance.

Brush Unit

The brush unit is a slave of the power unit,which supplies its low voltage direct current supply.The brush unit contains its own control switch for motor and the air vave solenoid (which is located inside the power unit).If a problem should cocur,check both the power unit and brush unit to locate the cause.

CAUTION:Demagnetization of the brush unit motor may occur if the reversing switch on the power unit is moved while the brush unit is running.A significant increase in the "no load" speed of the brush unit motor,along with a reduction in torque,will indicate that this has happened. If this happens,then the unit should be sent to the factory for repair.

At normal operating temperatures, the brrsh unit motor runs at about 9,000 RPM and the center brush drive shaft turns at 740 RPM.If demagnetization has occurred.themotor speed will increase to about 12,000 RPM,and the drive shaft to 1,000 RPM.

CAUTION: In cold weather, brush units which have been exposed to below freezing temperatures for an hour or more should be brought to room temperature before use. This will minimize the possibility of damage to the permanent magnet field.

Remove Power Unit Hood

Using a screw driver loosen the two screws on the hoods handle and pull up.

Cleaning The Filter Bag

Never operate your Von Schrader Upholstery Extraction Cleaning System without first making sure the cloth filter is in place. Running the machine without the cloth filter may ruin the power unit motor. Keep the filter bag clean.

Removing Filter Housing

Unlatch filter housing

Pull filter housing straight back (see illustration)

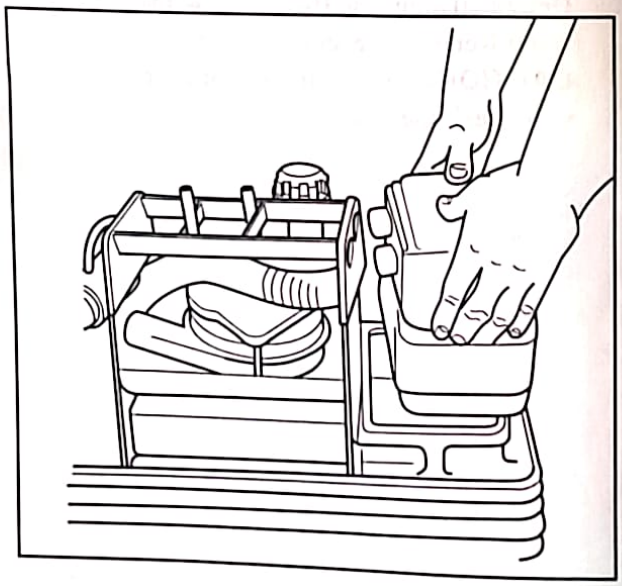

The filter bag and frame are hel in place in the housing by a rubber grommet on the franme which fits over a maetal tube.
To rernove the frame assembly:

Pull out on the frame at a point adjacent to the tube (see figure below).

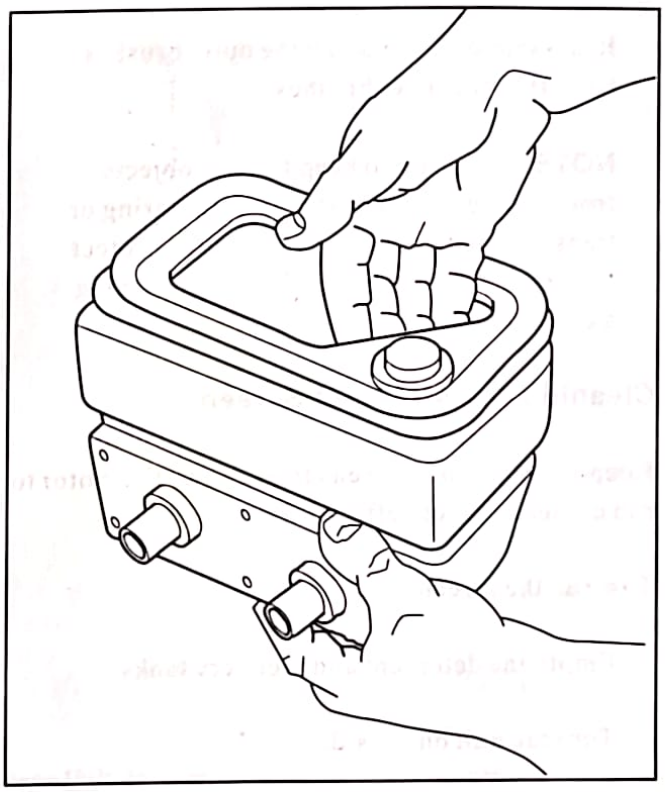

Clean the filter bag thoroughly by turning It insice out and brushing it clean.

Wash the filter occasionally to remove built up soil.

Note:Keep filer bag from becoming wet during use. Weting of the bag can allow liquid intofans and motor,which over time will ruin the motor bearings. A wet bag is the result of improper cleaning technique. If the filter bag is getting wet,do more brushing of the foam on the fabric before vacuuming or use less foam.

A good deaning technique will result in dust and dirt collecting on the filter bag with little or no foam in the recovery tank.

The large volume of air passing through the unque vacuum system breaks down and dries the dirty foam on its way to the recovery tank, If the bag has become wet during use:

If Filter Bag Should Get Wet

Shake out excess water.

Run power unit motor for one minute to dry bag.

Cleaning The Recovery Tank

Clean the recovery tank after each use or every 3 to 4 hours during continuous cleaning. To do so:

Remove hood.

Remove filter housing

Lift recovery tank from machine.

Clean thoroughly with fresh water.

If you are going tocontinue to use machine, add defoamer solution torecovrey tank per label instructions (about 1/2 cup liquidator solution should be added to tank after each emptying.)

Install cover.

Flushing / Emptying Detergent Tank

The detergent tank should be emptied after each use.

Remove detergent tank cap on top of unit.

Remove tank drain cap on bottom of machine. (Important - empty tank over a floor drain or in a sink.)

Flush tank with fresh warm water.

DO NOT vacuum this water through the recovery system.

Pning The Vacuum Hose

Remove hose from machine

Allow hose to dry thoroughly

Tap alogn sides of hose to loosen dirt

Shake out dirt and debris

Rinse thoroughly with clear water

Allowto dry, then replace on machine
DO NOT run motor to dry hose

Cleaning The Foam Generator

Leave all hoses attached

Unscew retaining nut

Remve screen and rinse with warm water

Replace screen onto foam generator body

Screw retaining nut onto foam generator

HAND TIGHTEN ONLY

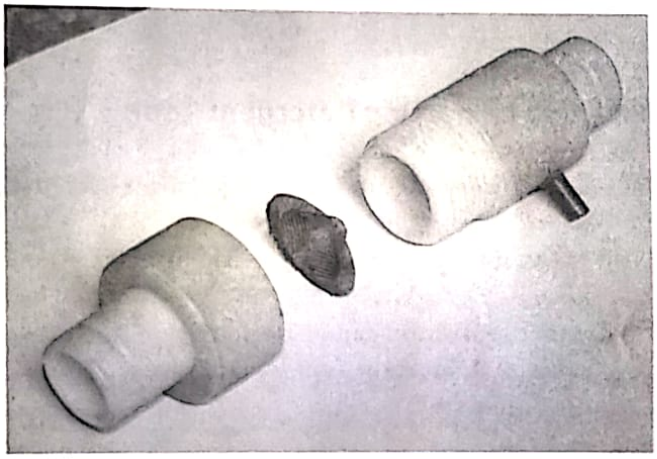

NOTE: See page 33 and refer to the Foam Generator Assembly

Removing The Brush Unit

To remove the cleaning brushes:

Pull the inner brush off the center shaft

Pull the outer brush evenly from the three drive lugs.

Reassamble by replacing the outer brushes first, then the inner brushes

NOTE: Take care to keep foreign objects from contacting thebrushes while storing or transporting the machine. Failure to protect the brushes may result in the bristles taking a distorted set.

Cleaning The Air Intake Screen

Keeping the intake screen clean allows the motor to run cooler and more efficiently.

To clean the screen:

Empty the detergent and recovery tanks

Turn the unit on it's side

Looking up from the bottom of the machine, the screen is located in the middle of the detergent tank.

Using a vacuum cleaner, gently clean the screen being careful not to push too hard on the screen.

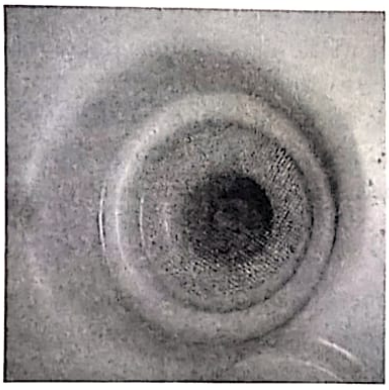

Troubleshooting

Trouble	Probable Cause	Solution
Low vacuum suction	Hoses improperly connected	Check and tighten hose clamp.
	Filter housing improperly positioned	Check and adjust position of filter housing.
	Filter bag clogged with dirt and lint	Clean filter bag
	Hoses clogged with dirt and lint	Clean hoses.
	Low supply voltage	Check power supply and correct if necessary
No foam/low volume of foam	Improper detergent solution mixture	Empty detergent tank and mix new solution per package instructions.
	Hard water	In areas with hard water, use a softening agent such as Calgon at the rate of about 1/2 cup per gallon (30ml per liter).
	Cap not sealed or broken on detergent tank	Check detergent tank cap and replace if necessary.
	Vacuum hose restricted	Make sure vacuum hose nozzle opening is not plugged.
	Two-channel hose kinked or improperly connected	Check for kinks or improper connection and correct if necessary.
	Foam generator plugged	Disassemble foam generator and clean.
	Low supply voltage	Check power supply and correct if necessary.
	Faulty solenoid	Replace solenoid (refer to Parts List(s)/Wiring Diagrams) or send unit out for sevice.
	Faulty switch on brush unit	Replace switch (refer to Parts List(s)/wiring Diagrams) or send unit out for service.
Base Unit does not run	Bad main switch	Replace main switch.
	Bad motor	Replace motor.
	Supply cord damaged or disconnected	Check connectionl if necessary realace cord.
	Bad wall outlet	Use different outlet
	Loose or faulty electrical connection	Tighten connection or repair wiring.
Brush unit does not run	Unit not properly connected to base unit	Check connection; if necessary reconnect to base unit.
	Faulty transformer	Replace transformer.
	Faulty rectifier	Replace rectifier.
	Blown fuse	Replace fuse.
	Faulty switch on brush unit	Replace switch.
	Faulty wiring on brush unit	Replace wiring.

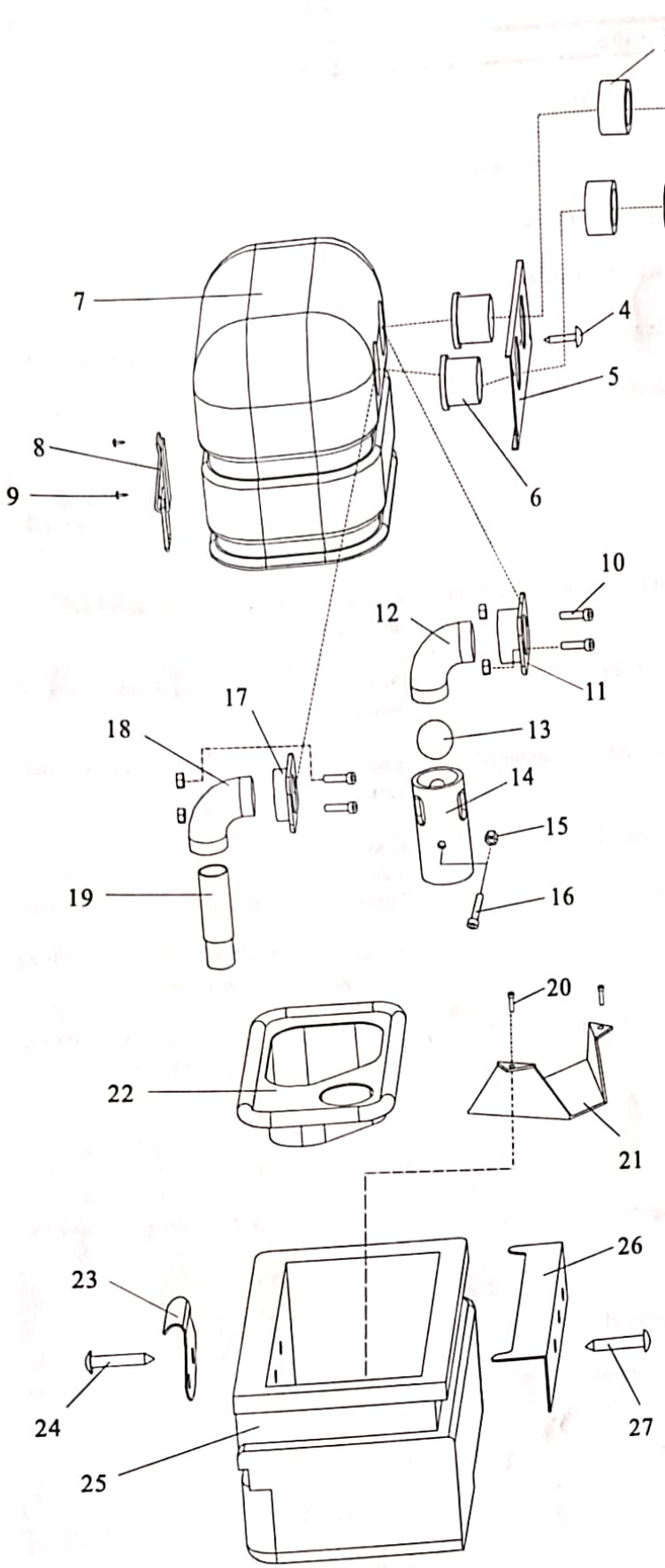

1 Ø25-45 hose clamp
2 thickness adding Ø36 soft tube
3 M40×5. 5×16 screw
4 M3×10 screw
5 echelon steel board
6 draught connecter
7 top cover of dirty water tank
8 handle of bucket(A)
9 M4×10 screw
10 M3×10 screw(staincess steel)
11 elbow connecter A
12 elbow connecter B
13 M3 self-locked nut
14 floating ball
15 floating ball frame
16 M5 self-locked nut
17 M5×55 screw(stainless steel)
18 1″ elbow
19 1″ machining tube
20 M3×10 screw
21 dirty water tank aluminium piece
22 dust cover
23 handle of bucket(B)
24 M4×10 screw(stainless steel)
25 dirty water under cover
26 dirty water tank straight steel board
27 M3×10 screw

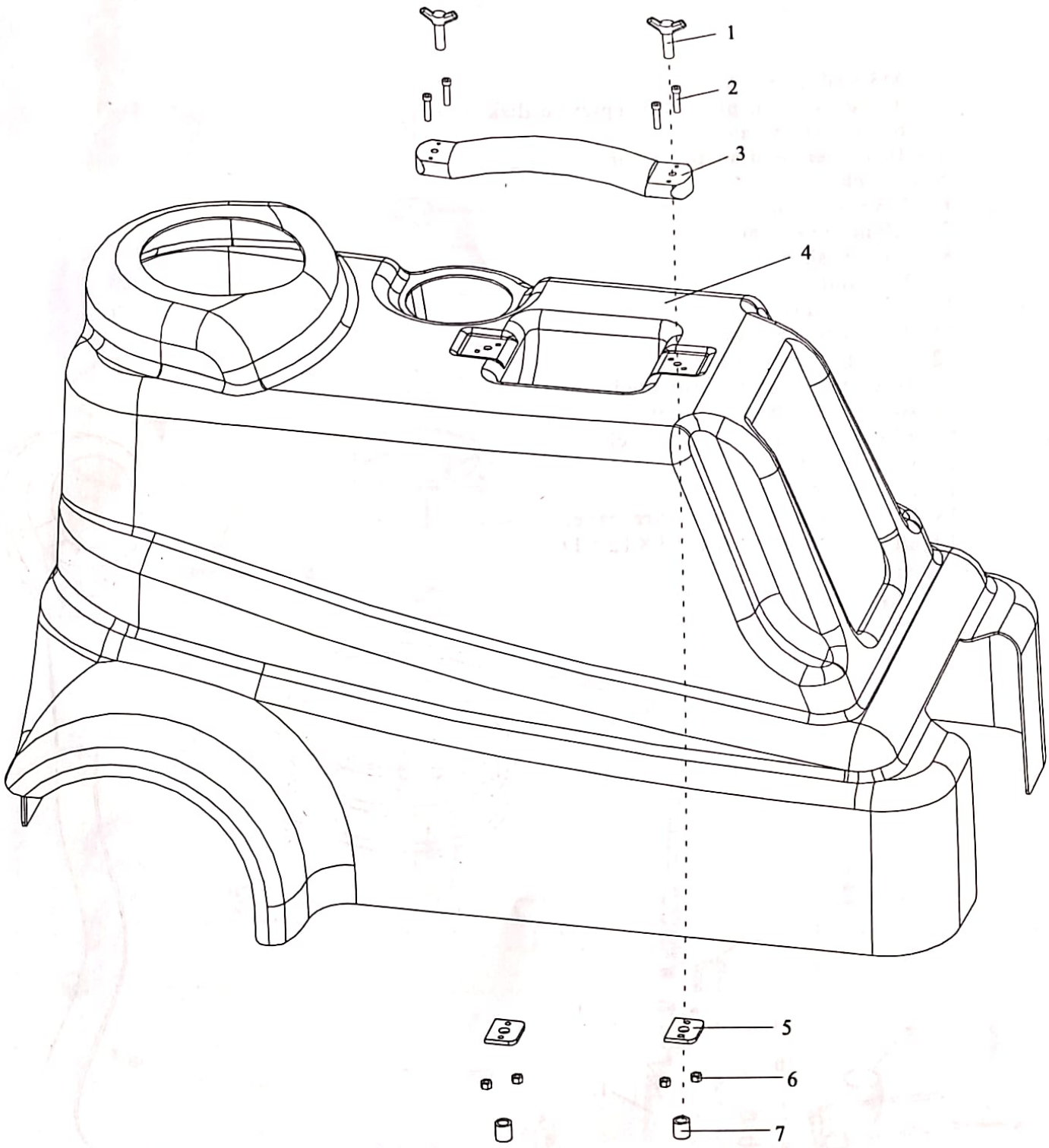

1 M5×55 butterfly screw
2 M4×15 round head screw
3 handle
4 mainframe crust
5 fixed handle steel piece
6 M4 self-locked nut
7 copper holder

1 M3×10 screw
2 4-leg aviation plug with epicylic disk
3 big offlet extrance
4 10A over loading protector
5 switch
6 M3×37 screw
7 Aluminium elbow
8 Ø10 washer
9 M10 nut
10 Ø6×12 spring
11 7×2 o-shaped ring
12 7-shaped lock bolt
13 10A over loading protected nut
14 square switch with light
15 adjustive water valve switch
16 Aluminium board
17 M14 plastic nut
18 Pg9 electrical source wire caver
19 electrical source wirc(3×12×1)

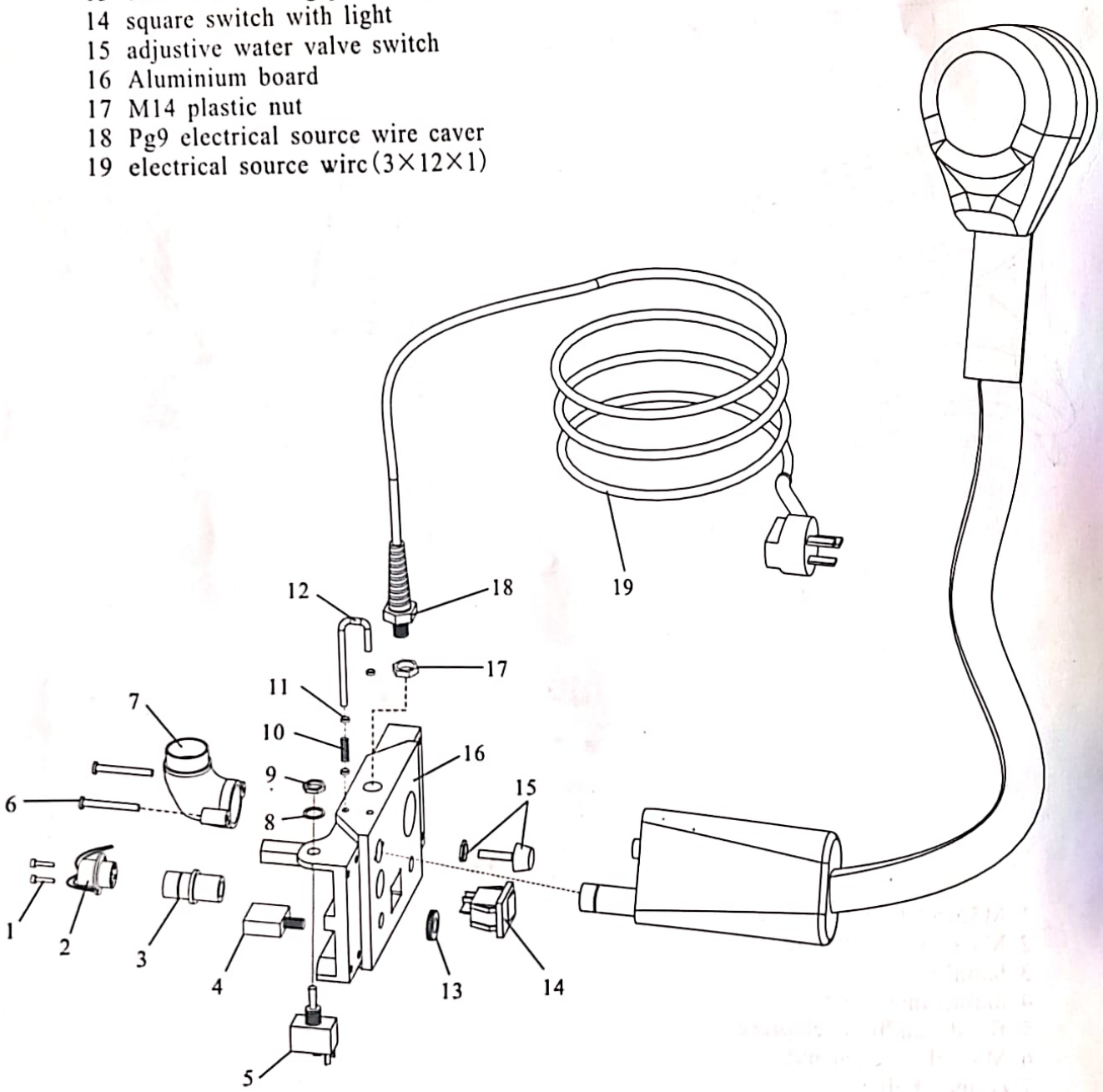

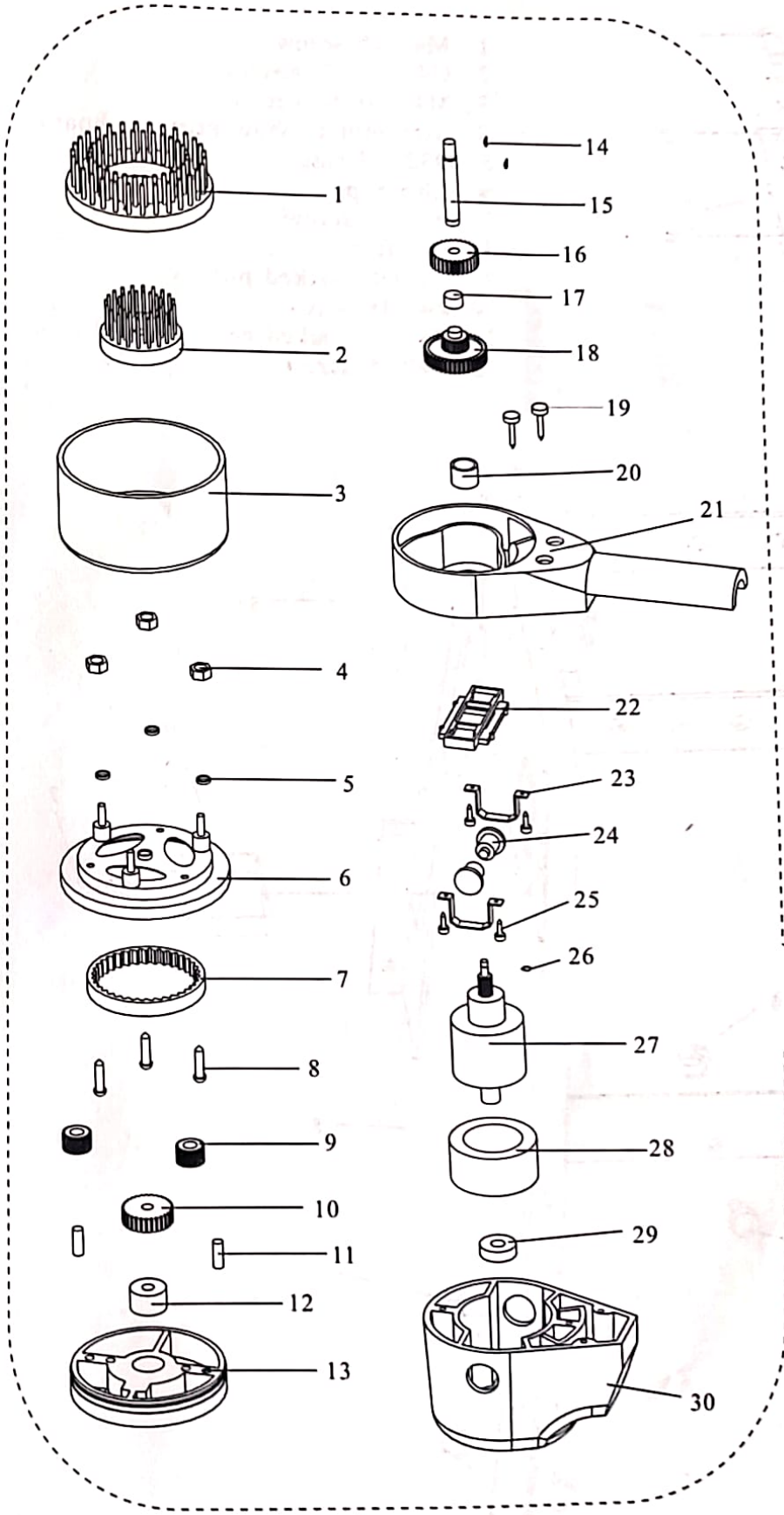

1 big brush
2 small brush
3 brush proteeted holder
4 M3 self-locked nut
5 Ø3×6×0. 5 washer
6 brush frame
7 milling gear E
8 M3×15 screw
9 Ø12 outside caster screw
10 milling gear D
11 milling gear C
12 fixed gear axle B
13 milling aluminium crust C
14 half round key
15 fixed gear axle A
16 milling gear B
17 M66 axletree
18 Ø9. 5 outside caster screw
19 milling gear A
20 M4×25 fixed screw
21 R6 axle
22 milling aluminium crust B
23 carbon brush holder
24 carbon brush fixed piece
25 M4×10 round head screw
26 carbon brush
27 rotor
28 eternity magnetism stator
29 6000 axletree
30 milling aluminium crust

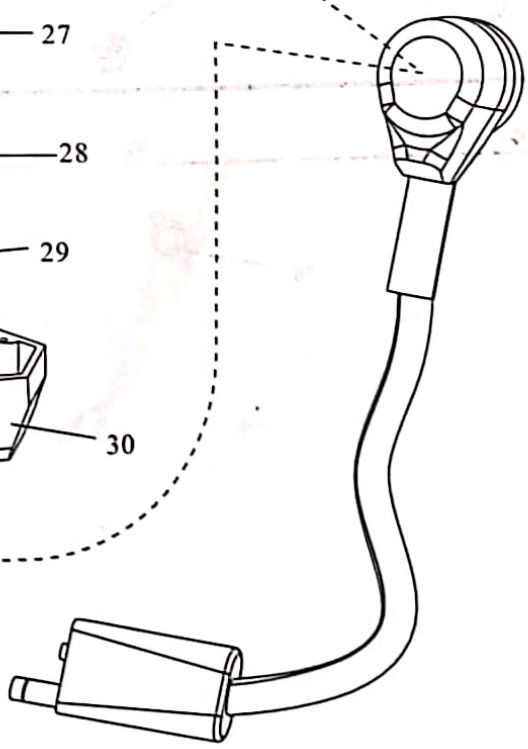

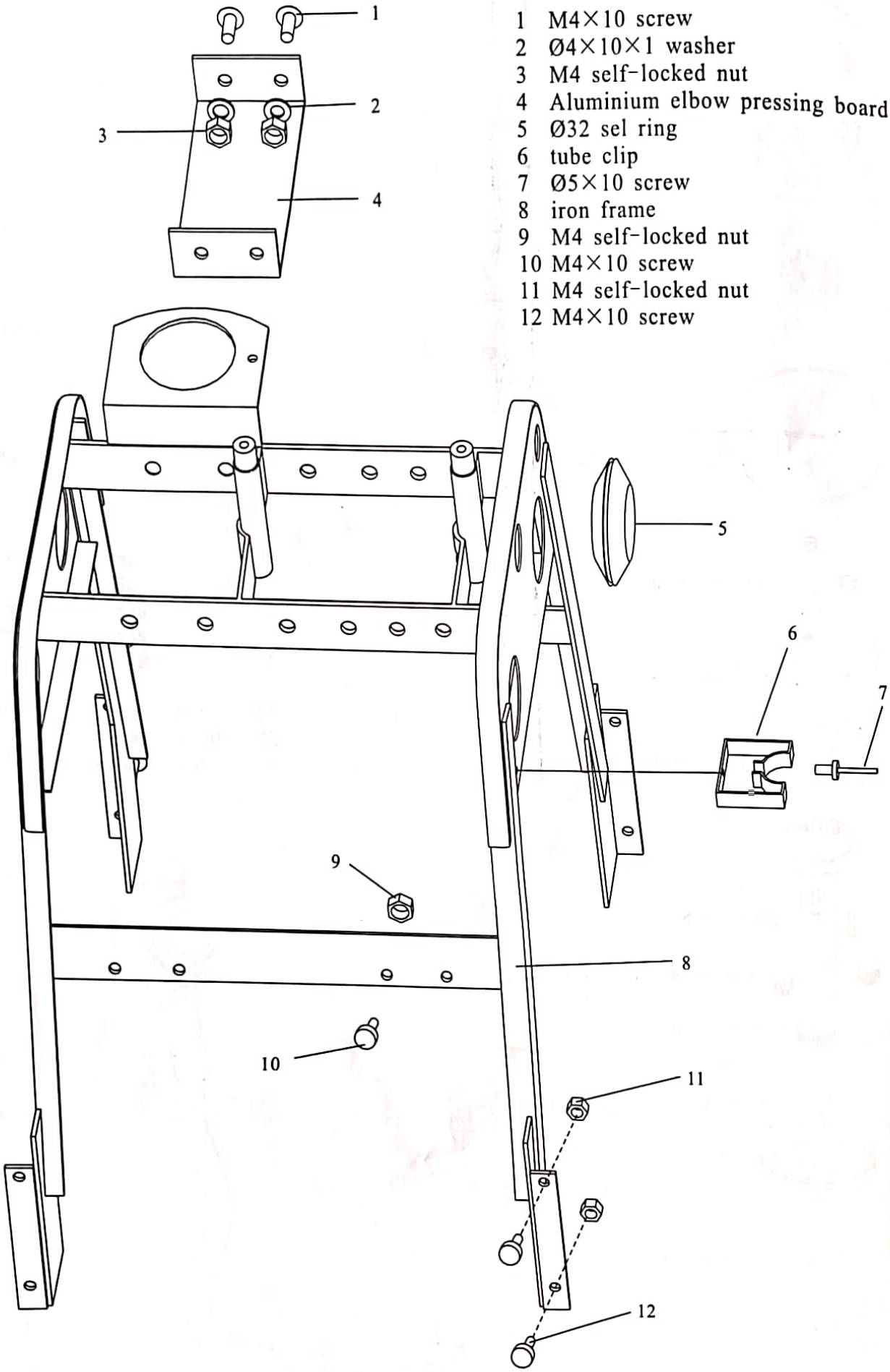

1 M4×10 screw
2 Ø4×10×1 washer
3 M4 self-locked nut
4 Aluminium elbow pressing board
5 Ø32 sel ring
6 tube clip
7 Ø5×10 screw
8 iron frame
9 M4 self-locked nut
10 M4×10 screw
11 M4 self-locked nut
12 M4×10 screw

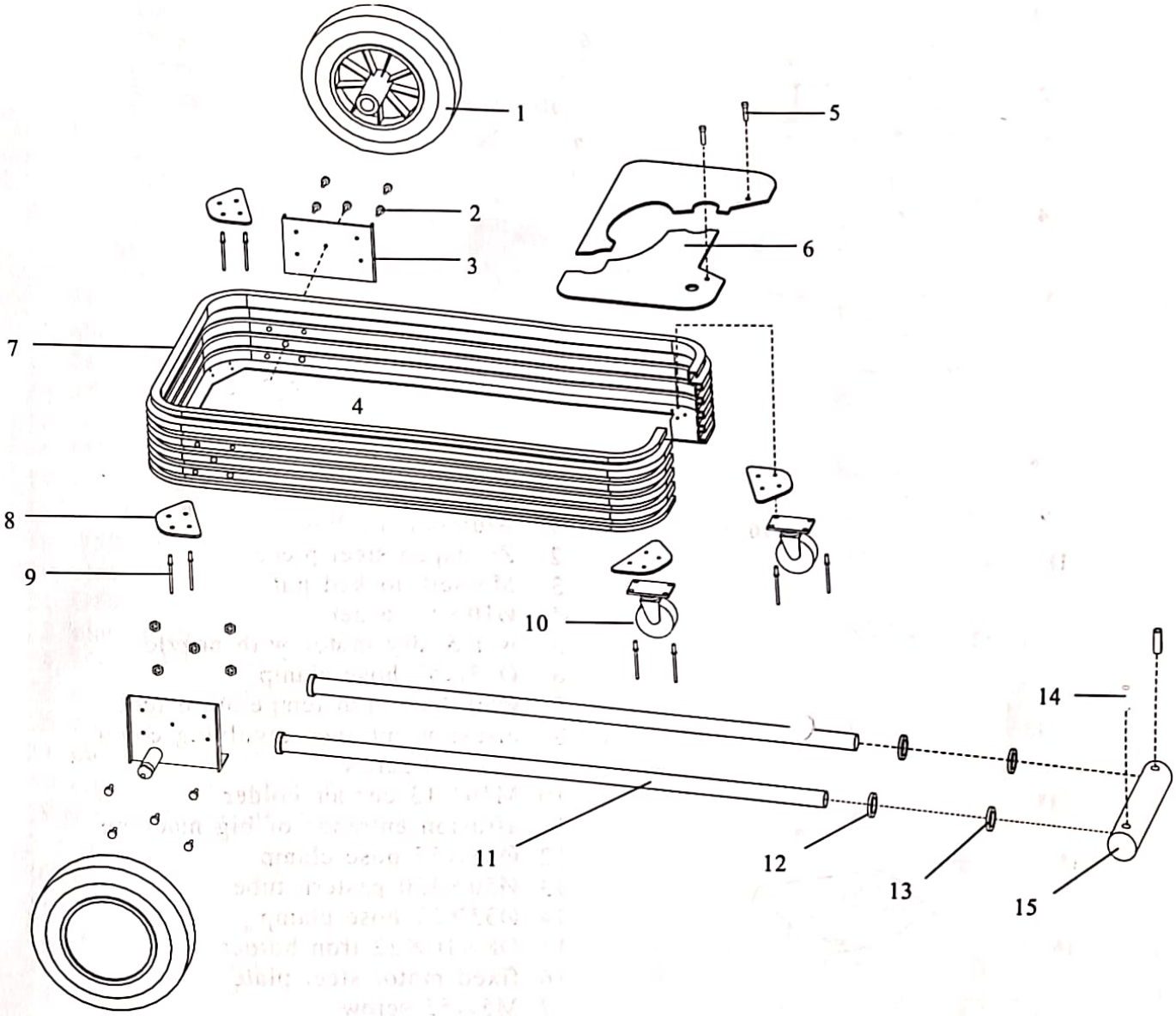

1 back wheel
2 M4×10 round head screw (staincess steel)
3 back wheel holder
4 M4 self-locked nut
5 M4×10 round head screw (staincess steel)
6 mainframe pastern inside
7 mainfrgme aluminium
8 fix aluminium piece of mainframe aluminium round ring
9 Ø5×10 screw
10 front wheel
11 handle combination B
12 handle pastern washer
13 handle washer
14 Ø4×38 hatch bolt
15 handle combination A

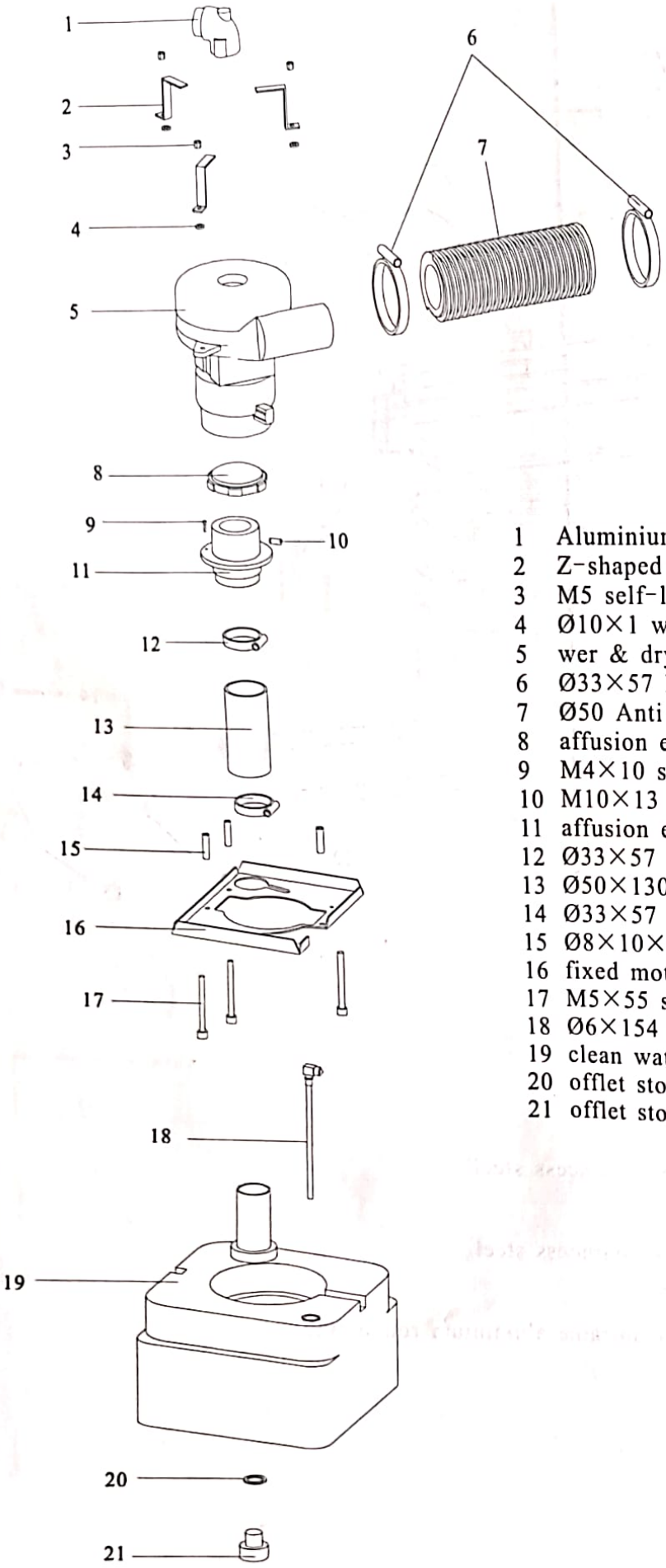

1 Aluminium elbow
2 Z-shaped steel piece
3 M5 self-locked nut
4 Ø10×1 washer
5 wer & dry motor with nozzle
6 Ø33×57 hose clamp
7 Ø50 Anti high temperature tube
8 affusion entrance revolving cover
9 M4×10 screw
10 M10×13 copper holder
11 affusion entrance of big machine
12 Ø33×57 hose clamp
13 Ø50×130 pastern tube
14 Ø33×57 hose clamp
15 Ø8×10×22 iron holder
16 fixed motor steel plate
17 M5×55 screw
18 Ø6×154 steel tube with elbow
19 clean water tank
20 offlet stopper seal ring
21 offlet stopper of big machine

1 M8 Nut
2 Ø8×16 washer
3 transformer
4 M4×15 round head screw (staincess steel)
5 rectifier
6 M4 self-locked nut
7 M3 self-locked nut
8 connection ternimal blick
9 soleplate (aluminium)
10 M3×15 screw
11 M8×65 six anyle outside sctew
12 Ø4×10×1 washer
13 M4×18 round head screw (staincess steel)
14 M4×60 sctew
15 Ø33×57 tube
16 Ø16-25 tube
17 Ø10 tube
18 Airflow distribute value A
19 Ø50×34×1. 5 silicon pastern ring
20 electromagnetism valve spring washer
21 Ø50×34×43 stainless steel holder
22 electromagnetism valve top cover
23 M4 self-locked nut
24 electromagnetism valve top
25 electromagnetism loop
26 electromagnetism crust
27 electromagnetism bottom cover
28 electromagnetism iron core
29 rubber washer
30 Ø12 hatch washer
31 M4×20 screw
32 Airflow distribute valve B
33 Proteeted cover
34 Ø4×8 washer
35 M4 self-locked nut